इंटरनेट मानक

Disclosure to Promote the Right To Information

Whereas the Parliament of India has set out to provide a practical regime of right to information for citizens to secure access to information under the control of public authorities, in order to promote transparency and accountability in the working of every public authority, and whereas the attached publication of the Bureau of Indian Standards is of particular interest to the public, particularly disadvantaged communities and those engaged in the pursuit of education and knowledge, the attached public safety standard is made available to promote the timely dissemination of this information in an accurate manner to the public.

"जानने का अधिकार, जीने का अधिकार"
Mazdoor Kisan Shakti Sangathan
"The Right to Information, The Right to Live"

"पुराने को छोड नये के तरफ"
Jawaharlal Nehru
"Step Out From the Old to the New"

IS 6366 (1971): Sprue plugs for use in foundries [MTD 14: Foundry]

"ज्ञान से एक नये भारत का निर्माण"
Satyanarayan Gangaram Pitroda
"Invent a New India Using Knowledge"

Act Number 22 of 2005
The Indian Parliament
RIGHT TO INFORMATION

Made Available By
Public.Resource.Org

"ज्ञान एक ऐसा खजाना है जो कभी चुराया नहीं जा सकता है"
Bhartṛhari—Nītiśatakam
"Knowledge is such a treasure which cannot be stolen"

BLANK PAGE

BRUTUM FULMEN

IGNORANTIA JURIS NON EXCUSAT

PROTECTED BY COPYRIGHT

(Reaffirmed 2000)

Indian Standard

SPECIFICATION FOR SPRUE PLUGS FOR USE IN FOUNDRIES

1. Scope — This Indian Standard covers requirements for sprue plugs for use in foundries.

2. Application — Sprue plugs are used in moulding for making sprues.

3. Dimensions — Dimensions and weights of sprue plugs are specified in Table 1.

TABLE 1 DIMENSIONS AND WEIGHTS OF SPRUE PLUGS

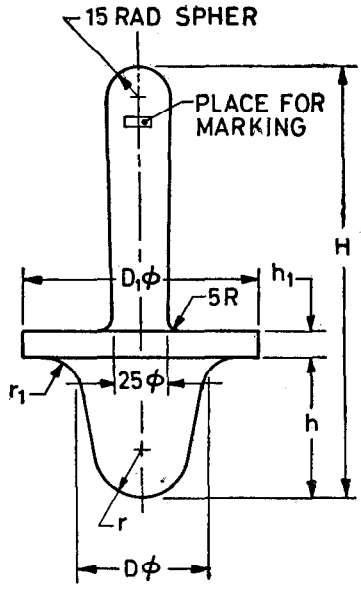

All dimensions in millimetres.

D	D_1	H	h	h_1	r	r_1	Approximate Weight kg
20	32	100	25	5	6	4	0·16
25	40	125	32		8	5	0·19
32	50	140	36		10	6	0·26
36	60	150	40	8	12	8	0·34
40	70	160	45		14	10	0·47
45	80	170	50		16	12	0·60
50	90	180	55		18	14	0·95
55	100	190	60		20	16	1·10
60	110	200	65	12	22	18	1·24

Designation of a sprue plug of height 125 mm and large diameter of 40 mm is:
Sprue Plug 125 IS : 6366

4. Material — 99·0 percent pure aluminium casting.

5. Tolerances — Coarse class IS : 2102-1969 ' Allowable deviations for dimensions without specified tolerances '.

6. General — The surface shall be free from casting defects like blow holes, blisters, etc.

7. Marking — Sprue plugs shall be marked with the following:

a) Trade-mark or name of the manufacturer, and

b) Designation.

Foundry Sectional Committee, SMDC 17 [Ref : Doc : SMDC 17 (1187)]

Adopted 20 October 1971 © July 1972, ISI Price Rs 2·00

INDIAN STANDARDS INSTITUTION
MANAK BHAVAN, 9 BAHADUR SHAH ZAFAR MARG
NEW DELHI 1

7.1 *ISI Certification Marking* — Details available from Indian Standards Institution, New Delhi 1.

8. Packing

8.1 In cardboard boxes, preferably separated by a perforated corrugated paper, each box containing six sprue plugs or as directed by the purchaser.

8.2 Cardboard boxes glued and reinforced with strips may be placed in wooden boxes weighing not more than 50 kg overall. The cardboard and wooden boxes may bear the information given under **7** and the number of pieces.

9. Supply — As given in IS : 1387-1967 ' General requirements for the supply of metallurgical materials (*first revision*) '.

Printed at Delhi Printers, Delhi 6, India